NOTE: UNLESS OTHERWISE SPECIFIED

1. WEIGHT: 0.8 LB MAX.
2. SURFACE TO WHICH VALVE IS MOUNTED REQUIRES 32 AND FLAT WITHIN .001.
3. SUPPLIED MOUNTING SCREWS: .138-32 X 1.0 LG. TORQUE TO 20 IN/ LB.
4. STANDARD ELECTRICAL CONNECTION:

   YELLOW +24 VOLT POWER
   ORANGE COMMAND
   GREEN COMMAND
   BLACK 24 VOLT RETURN

   WITH ORANGE + , AND GREATER THAN NULL COMMAND WITH RESPECT TO GREEN, FLOW IS OUT PORT A.
5. DIMENSIONS IN ( ) ARE IN MILLIMETERS.

EXPORT CONTROL WARNING: THIS DOCUMENT CONTAINS TECHNICAL DATA WHOSE EXPORT, TRANSFER, DISCLOSURE AND FURTHER PUBLICATION ARE RESTRICTED BY THE APPLICABLE EXPORT LAWS AND REGULATIONS OF THE UNITED STATES OF AMERICA, INCLUDING THE EXPORT ADMINISTRATION ACT OF 1979, AS AMENDED, AND THE EXPORT ADMINISTRATION REGULATIONS. VIOLATIONS OF THESE LAWS AND REGULATIONS ARE SUBJECT TO SEVERE CIVIL, CRIMINAL AND ADMINISTRATIVE PENALTIES.

THE DRAWINGS, SPECIFICATIONS OR DESCRIPTIONS CONTAINED HEREIN, TOGETHER WITH ALL INFORMATION AND KNOW-HOW DISCLOSED THEREBY, INCLUDE TECHNICAL DATA WHICH IS THE EXCLUSIVE PROPERTY OF WOODWARD HRT, INC. NO DISCLOSURE TO OTHERS, EITHER IN THE UNITED STATES OR ABROAD, OR REPRODUCTION OF ANY PART OF THE INFORMATION SUPPLIED IS TO BE MADE, AND NO MANUFACTURE, SALE OR USE OF ANY DEVICE, PROCESS OR COMPOSITION OF MATTER DISCLOSED THEREIN, WHETHER PATENTED OR NOT, SHALL BE MADE EXCEPT BY WRITTEN AUTHORIZATION OF WOODWARD HRT, INC. THIS NOTICE IS NOT INTENDED TO NULLIFY OR LIMIT RIGHTS GRANTED BY CONTRACT.

DWG NO 27A50F SH 1 REV B

REVISIONS

ZONE	LTR	DESCRIPTION	DATE	APPROVED
	B	SEE DCN	- -	RELEASED SEE DRR -
		FOR APPROVALS, SEE ATTACHED DOCUMENT RELEASE REPORT (DRR)		

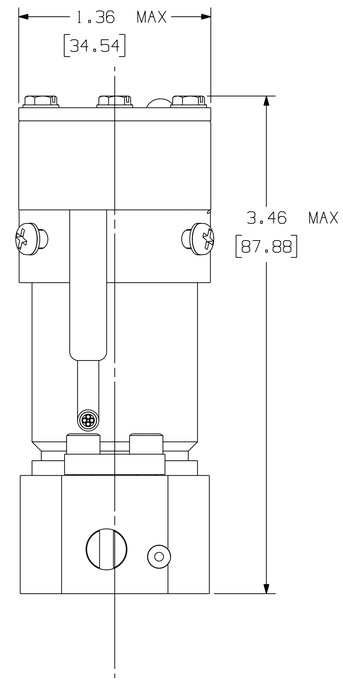

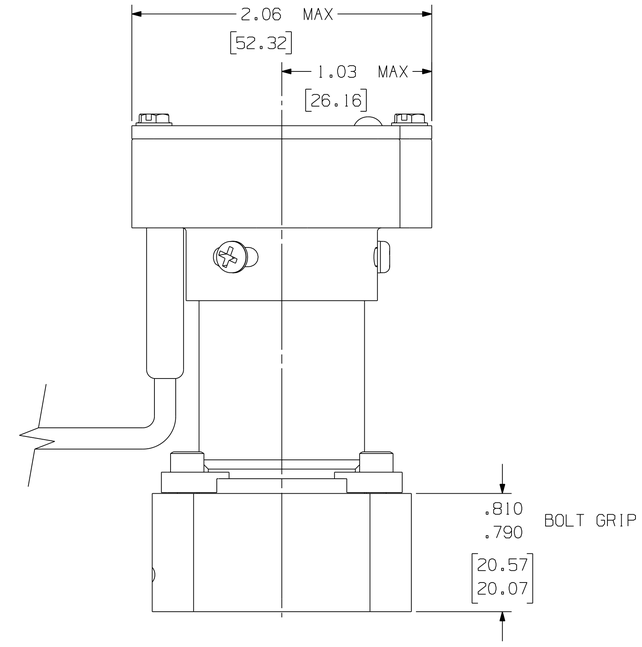

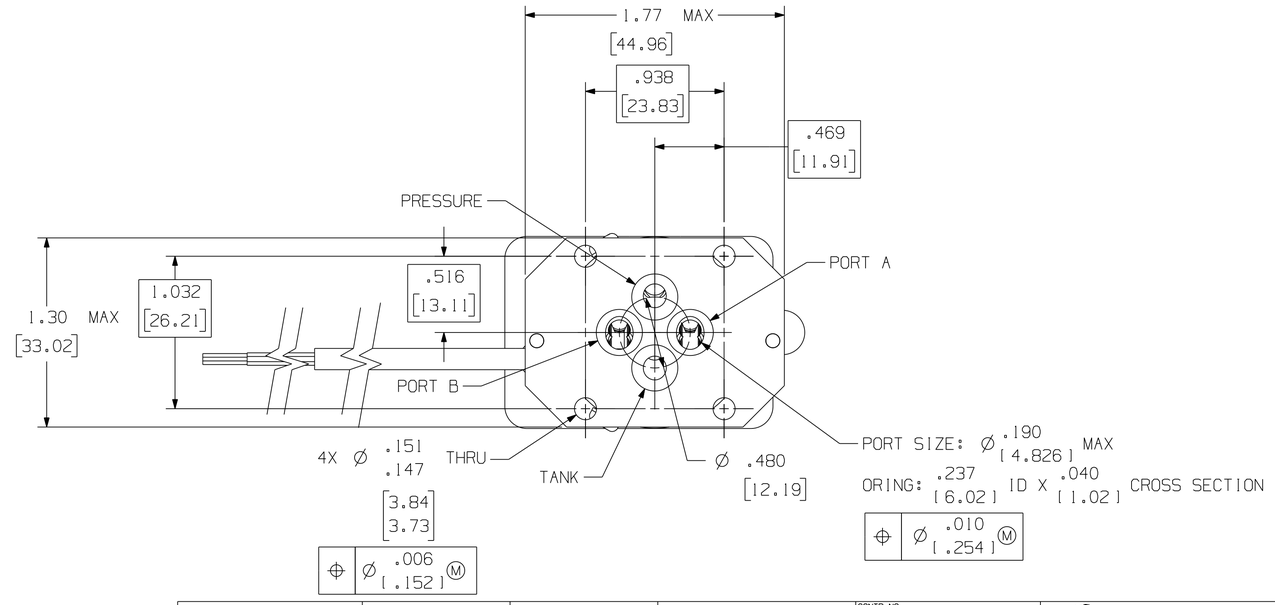

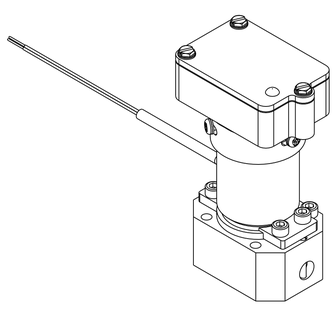

ALL SHEETS ARE THE SAME REVISION STATUS

	-	-
	-	-
QA -	-	-
MFG ENGR -	-	-
R&M/LOG -	-	-
WEIGHTS -	27A50F	27A50F
STRESS -	NEXT ASSEMBLY	USED ON
MATL -	APPLICATION	

UNLESS OTHERWISE SPECIFIED
DIMENSIONS ARE IN INCHES
DO NOT SCALE
TOLERANCES: ANGLES: ± 2°
.XX ± .03 .XXX ± .010
BREAK CORNERS .005-.020
INTERNAL RADII .005-.020
INTERPRET DRAWING IAW
MIL-STD-100

MATERIAL	HEAT TREAT	FINISH
-	-	-

CONTR NO -
DRAWN STARBIRD 20NOV97
CHECK A.C. ELROD 980608
APPROVED -
DESIGN APPROVED K.L. COAKLEY 980611
APPROVED -
ENGRG RLSE PROD
RELEASE DATE 980615

WOODWARD HRT
WOODWARD HRT, INC.
SANTA CLARITA, CA

SERVOVALVE, ROTARY DIRECT DRIVE

SIZE D | CAGE CODE 81873 | DWG NO 27A50F
SCALE 2/1 | WEIGHT TBD LBS | SHEET 1 OF 2

HR-Dsh1_Form

UG CAD SYSTEM

User: stoch1 Node: TSVALXCKXL12 Date: 1mp199.sh1
Dir: /usr/tmp/ug/ Part: 27A50F Time: 08:44
Message: Teamcenter Print Drawing 27A50F_DWG/B Dataset Version 26: In Process: Servo_Production_021808